Installation Instructions

Subject: 500ml-16.9oz Perrier PET contour – Single Depth 840 V Max product set up guide **Date: 09-16-02**

Kit Number: 1124080 **Rev B 09-24-02**

Installation Instructions: 1124079

Vendors: 720 V Max

Purpose: Provide dispensing of special contoured product.

Kit Includes

Quantity	*Part Number*	*Description*
2	1079422-1	79” Long bottle guide
1	1124079	Installation Instruction
1	1066112	Support Clip “A” (Black)

***Caution:* Disconnect power cord from power source before beginning installation**

Installation (see Figure 1)

Step #1 Locate Back Spacer into position #1.

Step #2 Install long bottle guides (P/N1079422-1) into the right and left partition slots B & C.

Step #3 Install Black A Clip (P/N1066112) into position #1 on gage bar.

Step #4 Install gage bar in #1 slot on front and rear mech. plate.

Step #5 Adjust cam setting to position #1.

Column Setup

Cam Setting	Back Spacer	Neck Guide Locations	Gage Bar Clip Location	Gage Bar Location	Side Spacer	Sold Out Flap	Sold Out Spacer
1	1	B/C	A/#1	#1	N/A	Long	N/A

Note: To properly vend product the V-Max must have the columns set up as illustrated.

500ml – 16.9oz Perrier PET contour 840 V Max Product Set Up Guide

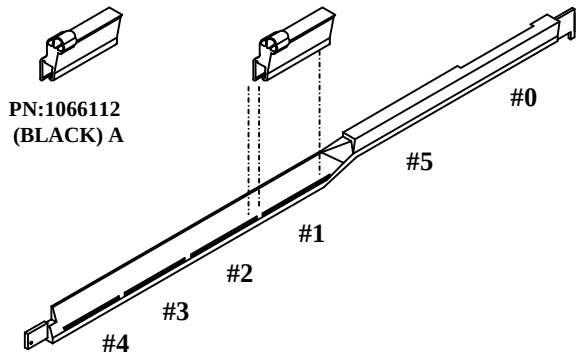

Gage Bar Clip Location

Set Up Guide

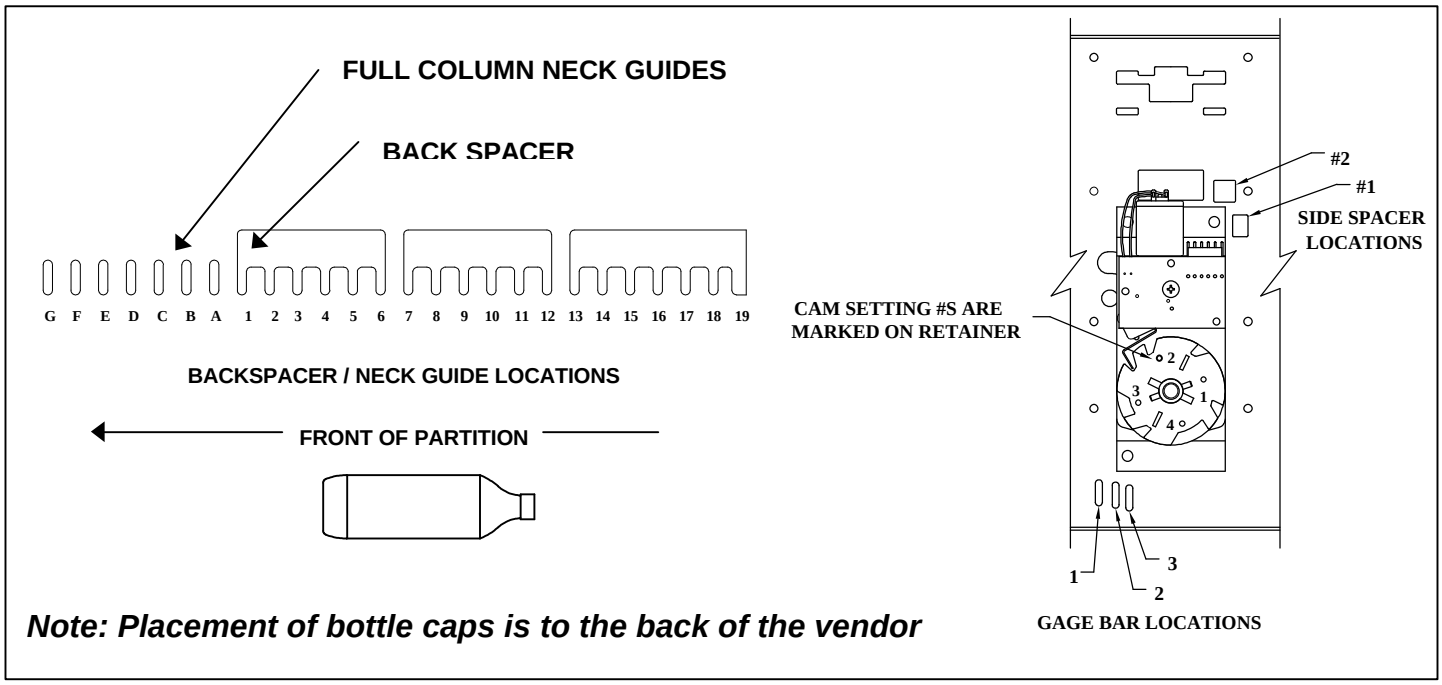

Note: Placement of bottle caps is to the back of the vendor

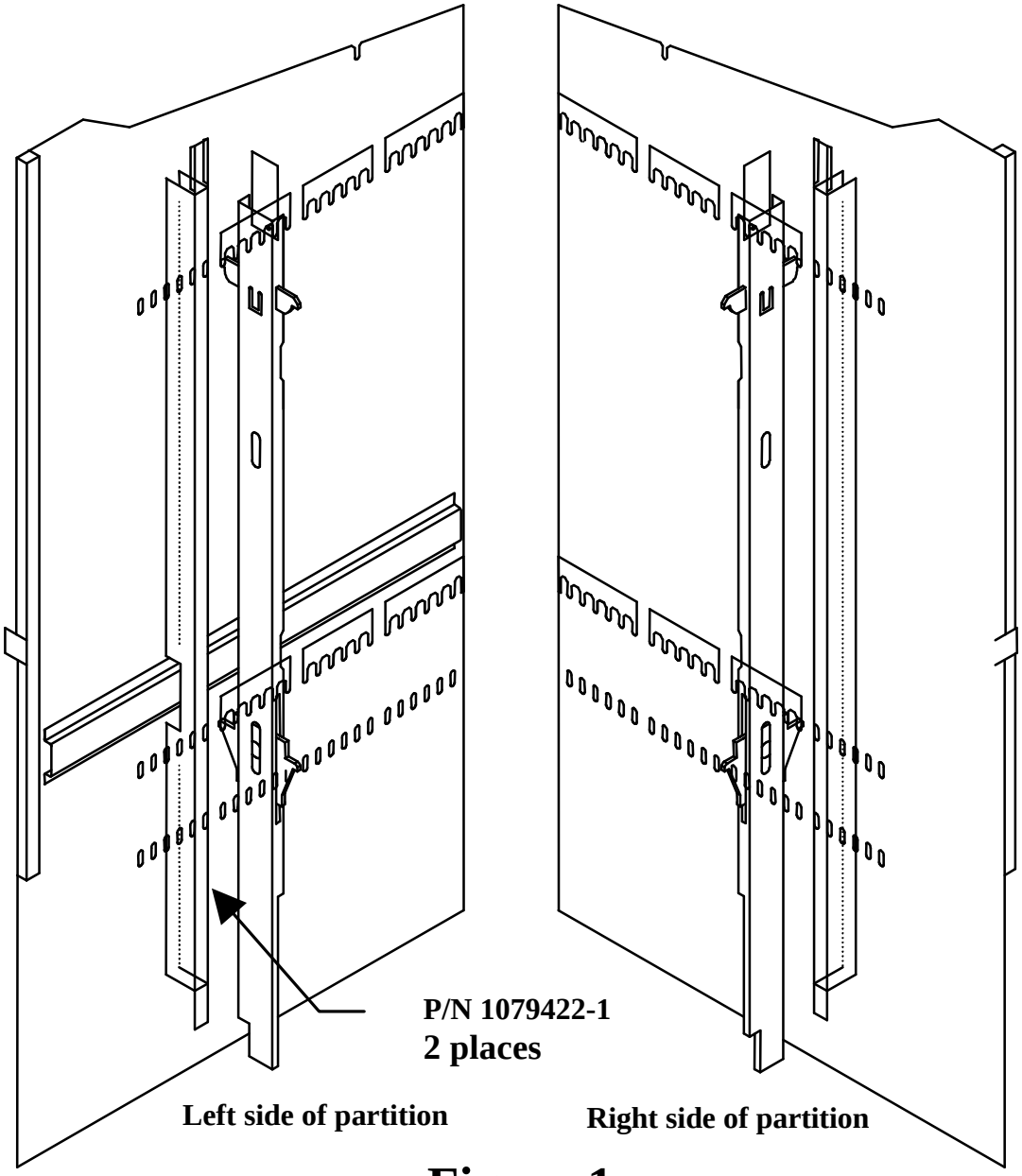

Figure 1

FOR OTHER PRODUCT SET-UP GUIDES, CONTACT THE VENDO COMPANY.

TEL: (559) 439-1770 FAX: (559) 650-3455