Vendo® Engineering *V-Max* *Set Up Guide*

Size: 20.8oz / 615ml **Rev. A** **Date 06/19/01**
Pkg. Description/Type: DANNON WATER WITH SPORT CAP
Franchise: DANNON **KIT#**

Column Setup

Cam Setting	Back Spacer	Neck Guide Locations	Gage Bar Clip Location	Gage Bar Location	Side Spacer	Sold Out Flap	Sold Out Spacer
2	19	N/A	N/A	#2	1078864 Loc. #2	Long	N/A

Note: To properly vend product the V-Max must have the columns set up as illustrated.

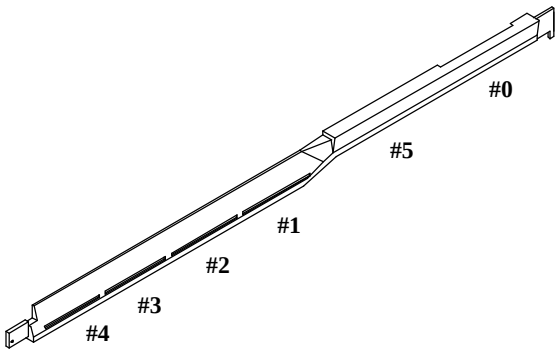

Gage Bar Clip Location

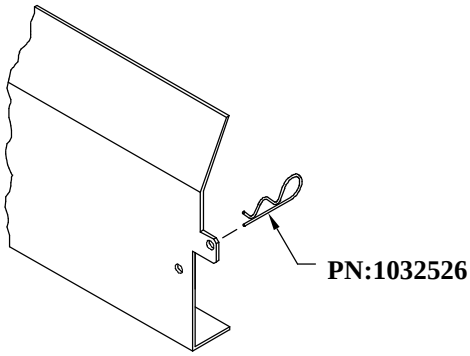

PN:1078864
Spacer

Set Up Guide

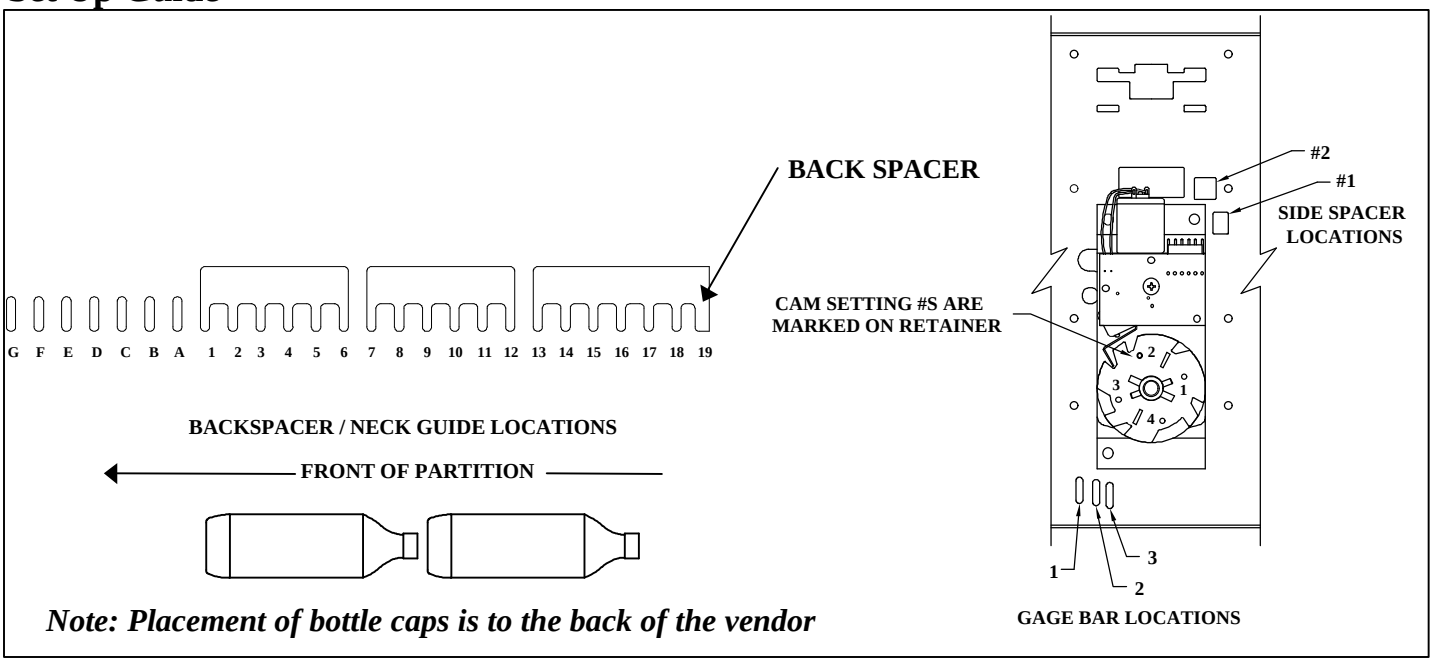

Note: Placement of bottle caps is to the back of the vendor

FOR OTHER PRODUCT SET-UP GUIDES, CONTACT THE VENDO COMPANY.
TEL: (559) 439-1770 FAX: (559) 650-3455.

Installation Instruction #