Vendo® Engineering *V-Max* *Set Up Guide*

Size: 20oz **Rev. A** **Date 5/9/03**
Pkg. Description/Type: Le Nature's Ice Water with Lemon
Franchise: Le Nature's

Column Setup

Cam Setting	Back Spacer	Neck Guide Locations	Gage Bar Clip Location	Gage Bar Location	Side Spacer	Sold Out Flap	Sold Out Spacer
2	13	N/A	C/#1	#1	N/A	1112163	N/A

Note: To properly vend product, the V-Max must have the columns set up as illustrated.

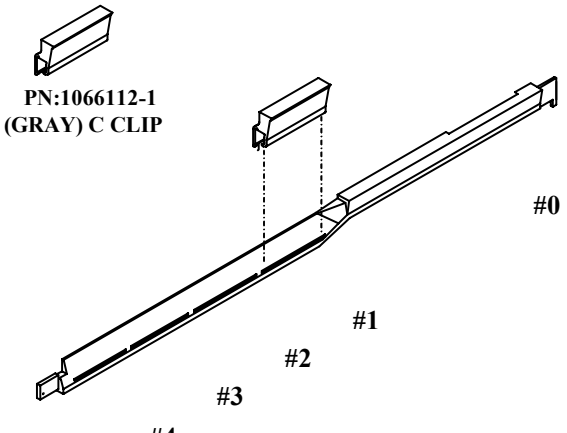

Gage Bar Clip Location

Set Up Guide

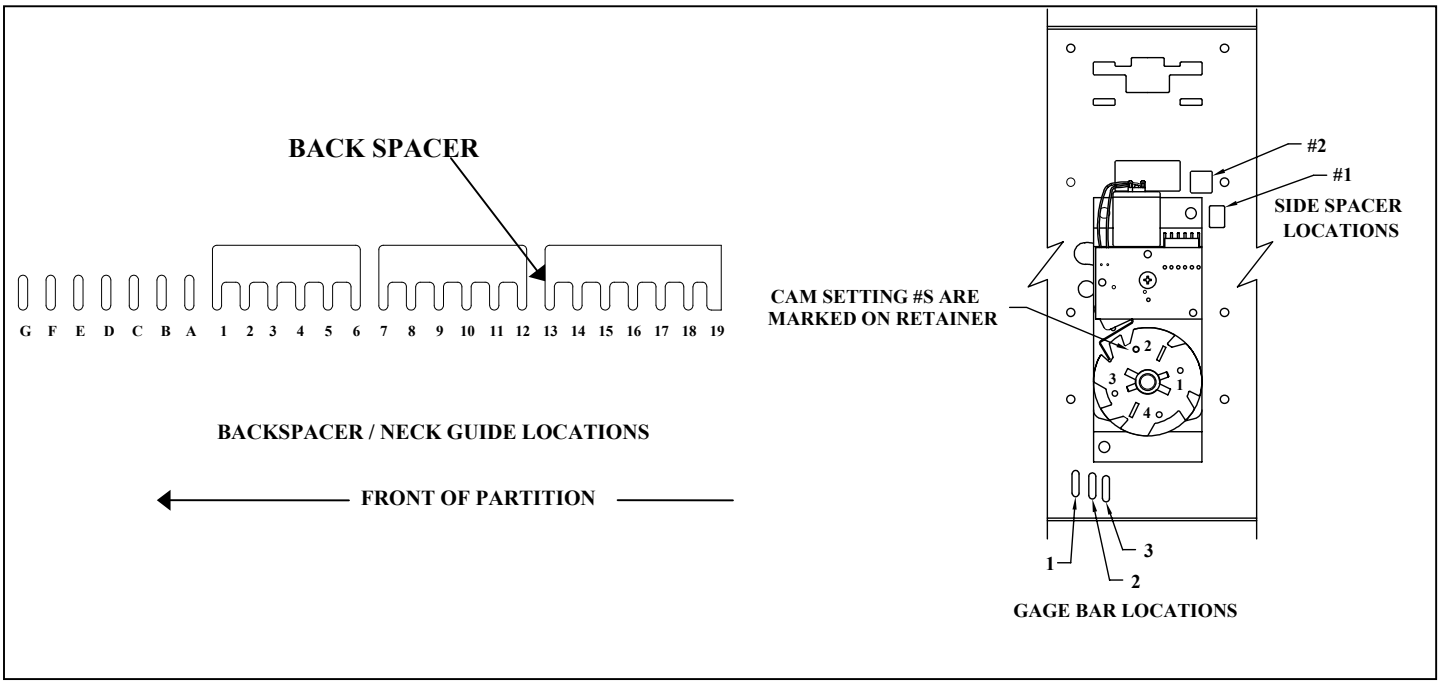

FOR OTHER PRODUCT SET-UP GUIDES, CONTACT THE VENDO COMPANY.
TEL: (559) 439-1770 FAX: (559) 650-3455.