Vendo® Engineering *V-Max* *Set Up Guide*

Size: 16oz Glass **Rev. A** **Date 6/6/03**
Pkg. Description/Type: Tropical Rhythms
Franchise: Grace Foods International

Column Setup

Cam Setting	Back Spacer	Neck Guide Locations	Gage Bar Clip Location	Gage Bar Location	Side Spacer/ Shim	Sold Out Flap	Sold Out Spacer
2	9	N/A	1066112-1 C/1	#1	N/A	1112163 Long	N/A

Note: To properly vend product, the V-Max must have the columns set up as illustrated.

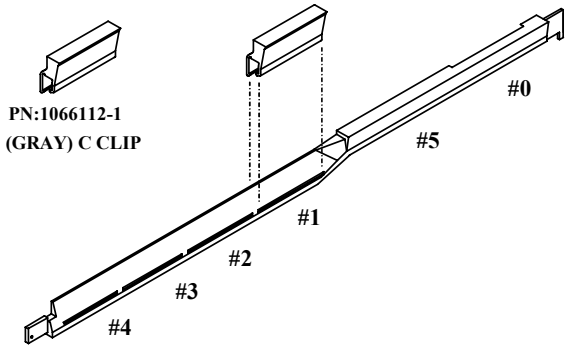

Gage Bar Clip Location

Set Up Guide

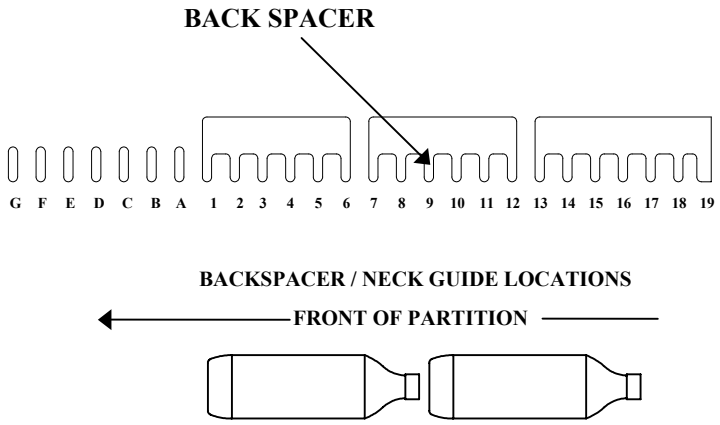

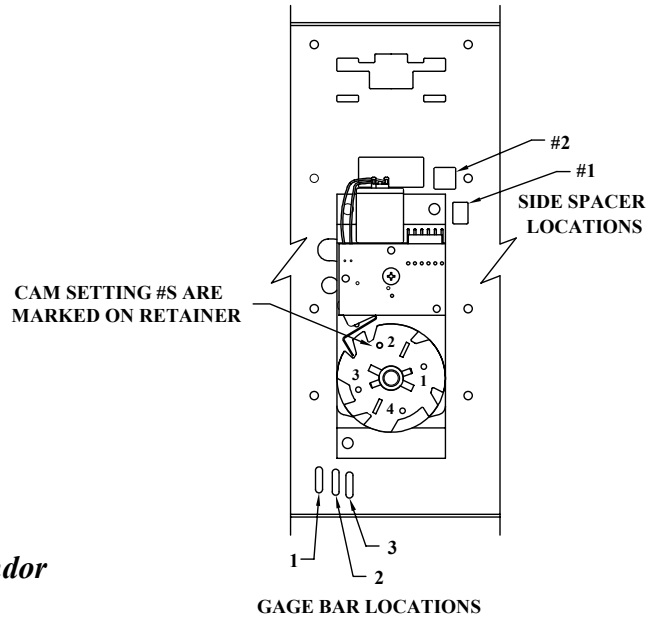

Note: Placement of bottle caps is to the back of the vendor

FOR OTHER PRODUCT SET-UP GUIDES, CONTACT THE VENDO COMPANY.
TEL: (559) 439-1770 FAX: (559) 650-3455.