Vendo Engineering V-Max *Set Up Guide*

Size: 11oz / 325ml **Rev. A** **Date 02/15/02**

Pkg. Description/Type: COCIO CHOCOLATE MILK 11oz / 325ml CAN

Franchise: UPP ENTERTAINMENT MRKT. **KIT#**

Column Setup

Cam Setting	Back Spacer	Neck Guide Locations	Gage Bar Clip Location	Gage Bar Location	Side Spacer	Sold Out Flap	Sold Out Spacer
3	9	N/A	B/#1 B/#2	#2	1122032 Loc. #1	Long	N/A

Note: To properly vend product the V-Max must have the columns set up as illustrated.

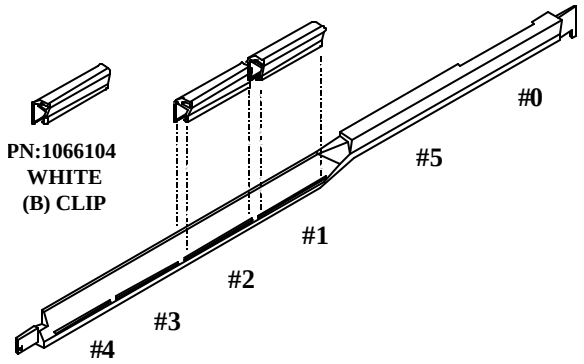

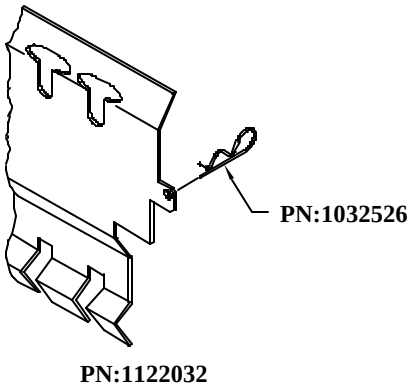

Gage Bar Clip Location **Spacer**

Set Up Guide

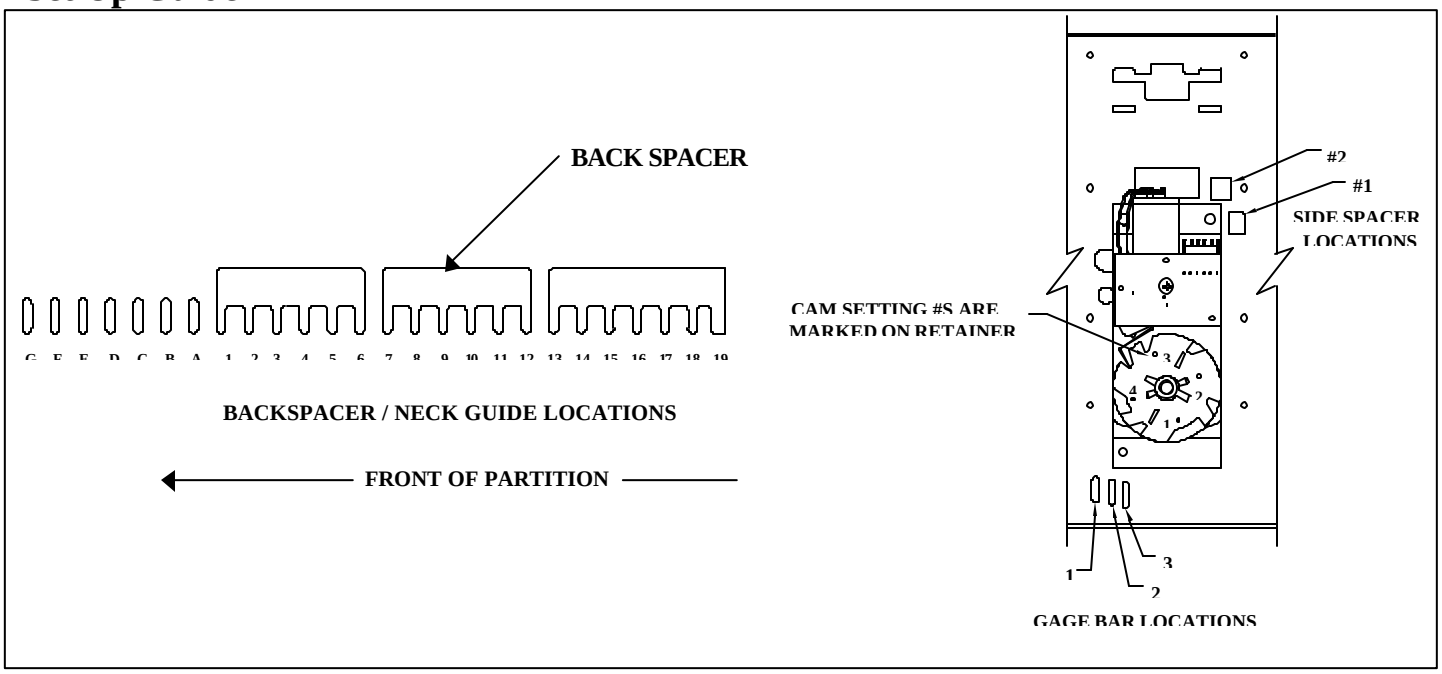

FOR OTHER PRODUCT SET-UP GUIDES, CONTACT THE VENDO COMPANY.
TEL: (559) 439-1770 FAX: (559) 650-3455.

Installation Instruction #