Vendo® Engineering *V-Max* *Set Up Guide*

Size: 430ml / 14.54oz **Rev. A** **Date 08/23/99**
Pkg. Description/Type: 430ml / 14.54oz WATSON PURE WATER
Franchise: HONG KONG **KIT#**

Column Setup

Cam Setting	Back Spacer	Neck Guide Locations	Gage Bar Clip Location	Gage Bar Location	Side Spacer	Sold Out Flap	Sold Out Spacer
2	10	N/A	C/#1	Front #1 Rear #2	1115791 Loc. #1	Long	N/A

Note: To properly vend product the V-Max must have the columns set up as illustrated.

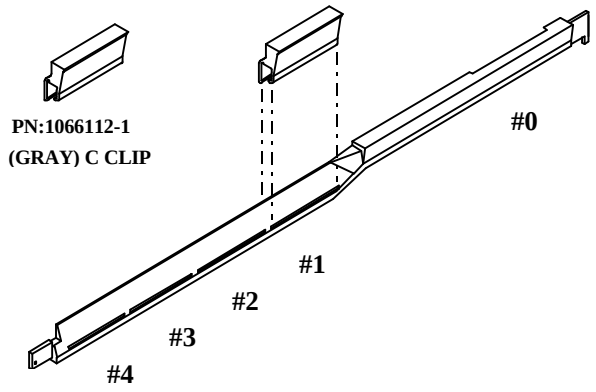

Gage Bar Clip Location

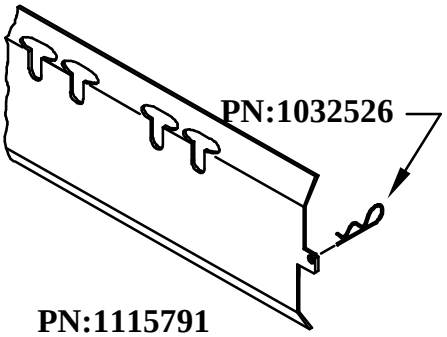

Spacer

Set Up Guide

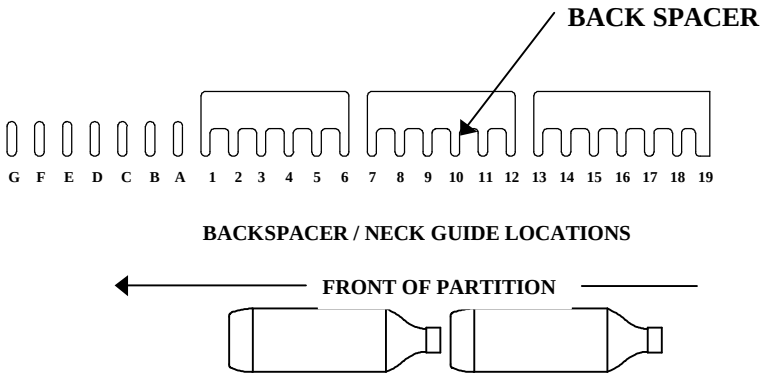

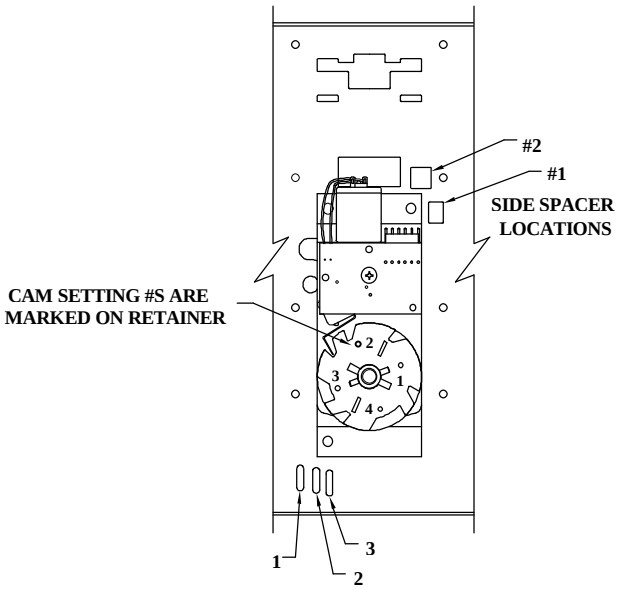

Note: Placement of bottle caps is to the back of the vendor

FOR OTHER PRODUCT SET-UP GUIDES, CONTACT THE VENDO COMPANY.
TEL: (559)439-1770 FAX: (559) 439-2083.

Installation Instruction #