Vendo® Engineering *V-Max* *Set Up Guide*

Size: 16oz / 473ml **Rev. A** **Date 02/28/01**

Pkg. Description/Type: WELCH'S FRUIT JUICE GLASS

Franchise: WELCH'S **KIT# 1113228**

Column Setup

Cam Setting	Back Spacer	Neck Guide Locations	Gage Bar Clip Location	Gage Bar Location	Side Spacer	Sold Out Flap	Sold Out Spacer
2	10	N/A	C/#1 A/#2	#1	N/A	1112163	N/A

Note: To properly vend product the V-Max must have the columns set up as illustrated.

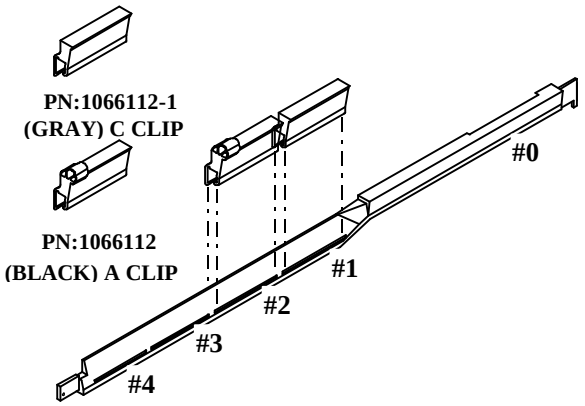

Gage Bar Clip Location

Set Up Guide

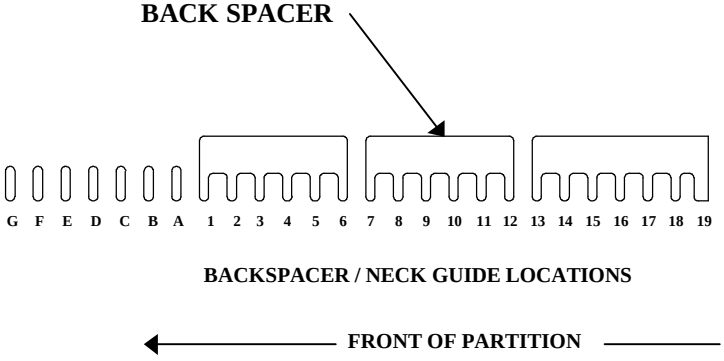

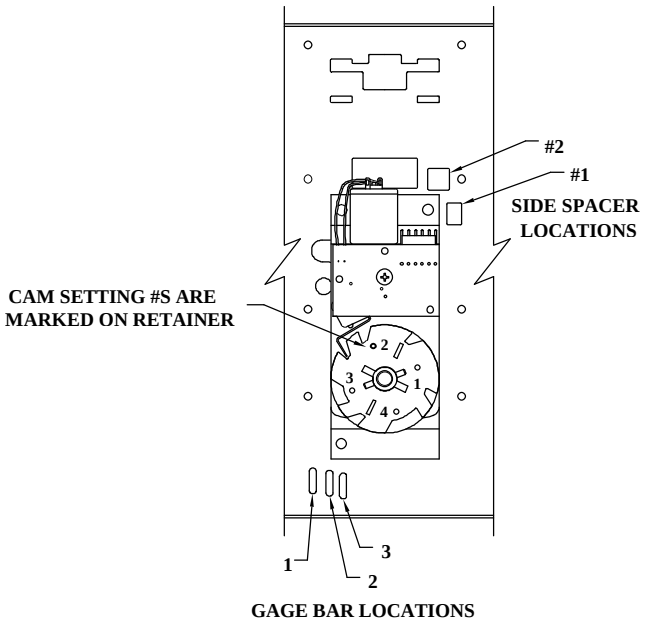

FOR OTHER PRODUCT SET-UP GUIDES, CONTACT THE VENDO COMPANY.
TEL: (209)439-1770 FAX: (209) 439-2083.

Installation Instruction #