Vendo® Engineering 630/840 79”V-Max *Set Up Guide*

Size: 8.3 oz / 250ML 2.09 x 5.29 (53mm x 134mm) **Rev. A** **Date 05/10/01**
Pkg. Description/Type: RED BULL
Franchise: RED BULL **KIT#1122504**

Column Setup

Cam Setting	Back Spacer	Neck Guide Location	Gage Bar Clip Location	Gage Bar Location	Magnetic Column Spacer (*)	Side Spacer	Sold Out Flap	Sold Out Spacer
3	13	N/A	See Detail	#2 Front #3 Back	1 pkg of 2 1114348-9	1122166 Loc. #2	Short 1083449	1077457

Note: To properly vend product the V-Max must have the columns set up as illustrated.
The 250ml product must be vended on the right side of mixed product. (Jam will occur if adjacent right gage bar is in slot #1)
***Install magnetic column spacers into right side of partition above product side spacer (See Figure 1 for installation detail)**

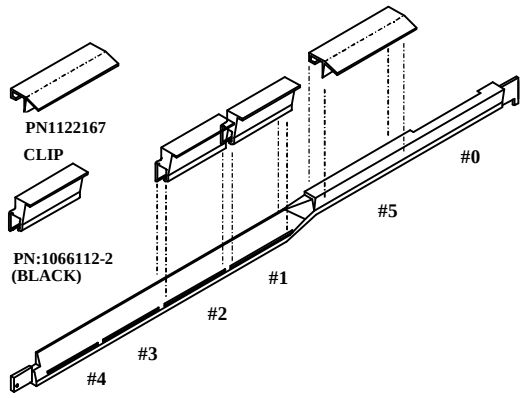

Gage Bar Clip Location

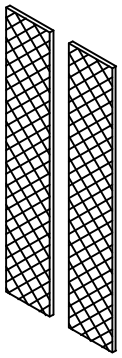

PN:1114348-9

Column Spacers

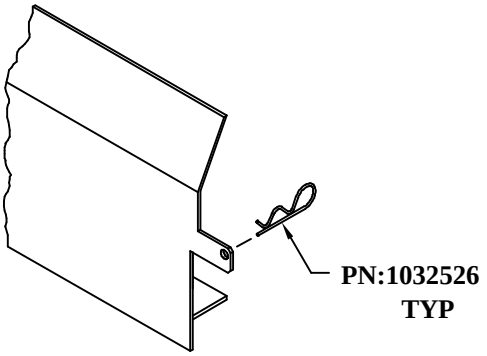

PN:1122166

Spacer

Set Up Guide

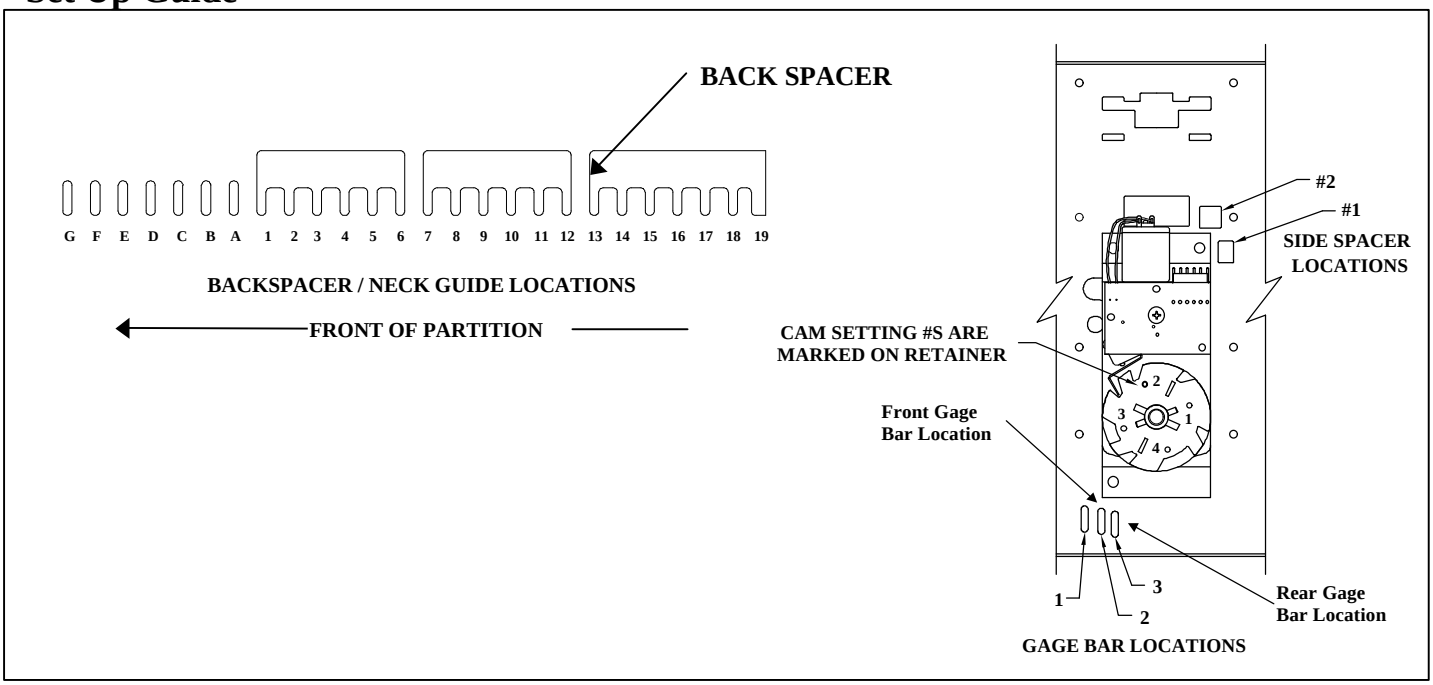

FOR OTHER PRODUCT SET-UP GUIDES, CONTACT THE VENDO COMPANY.
TEL: (559) 439-1770 FAX: (559) 650-3455.

Installation Instruction #1122505

<u>Caution:</u> Disconnect power cord from power source before beginning installation

<u>Installation (see Figure 1)</u>

Step #1 Locate Back Spacer into position #13.

Step #2 Install .74 product side spacer (P/N1122166).

Step #3 Install pkg. of two 43.5” long magnetic foam pads (P/N1114348-9) on the right side partition. Locate pads as shown in Figure 1 above the .74 product side spacer (P/N1122166)

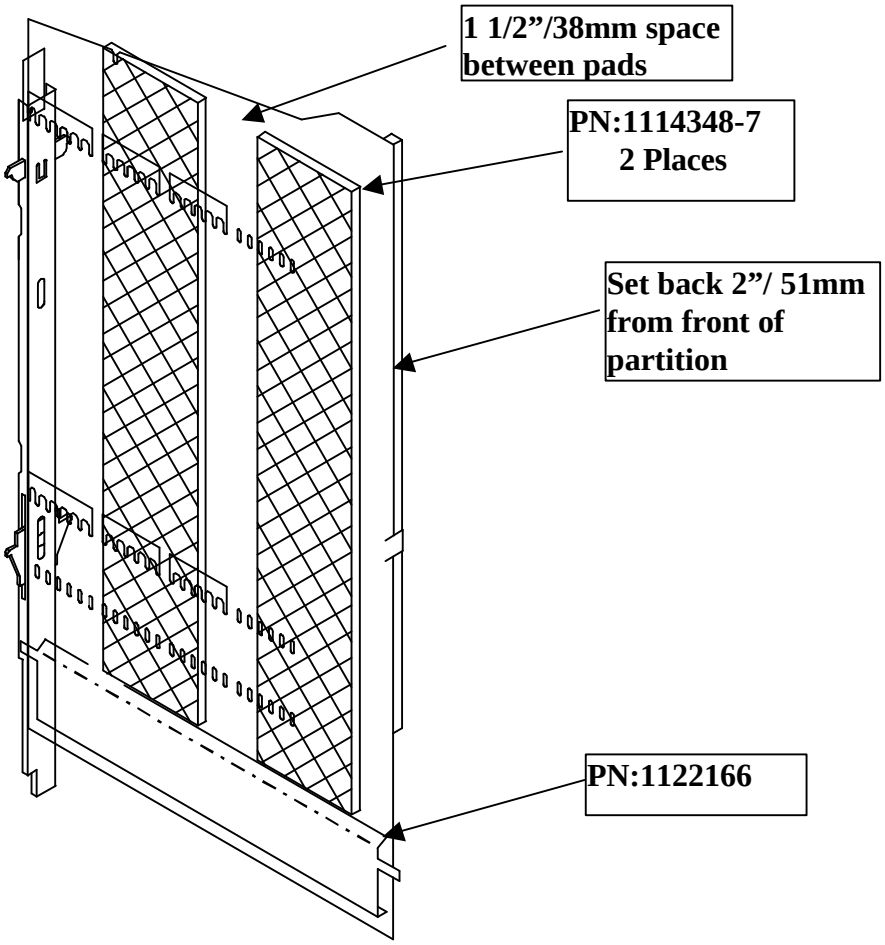

Figure 1

Right Side Partition