Vendo® Engineering *V-Max* *Set Up Guide*

Size: 500ml / 16.9oz **Rev. A Date 8/27/03**
Pkg. Description/Type: OZARKA WATER
Franchise: NESTLE WATERS

Column Setup

Cam Setting	Back Spacer	Neck Guide Locations	Gage Bar Clip Location	Gage Bar Location	Side Spacer	Sold Out Flap	Sold Out Spacer
2	15	N/A	C/1	#2	1078872 Loc. #2	Long #1112163	N/A

Note: To properly vend product, the V-Max must have the columns set up as illustrated.

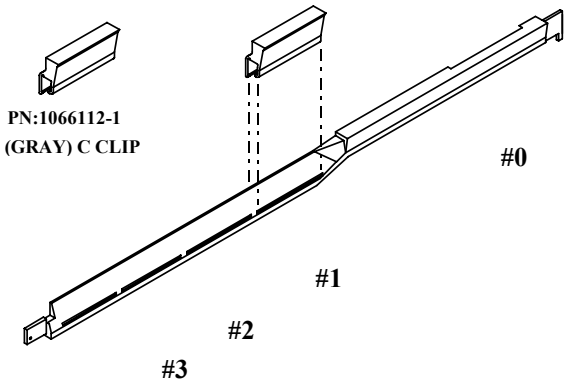

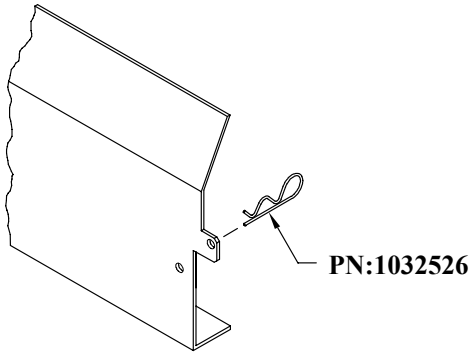

Gage Bar Clip Location

Set Up Guide

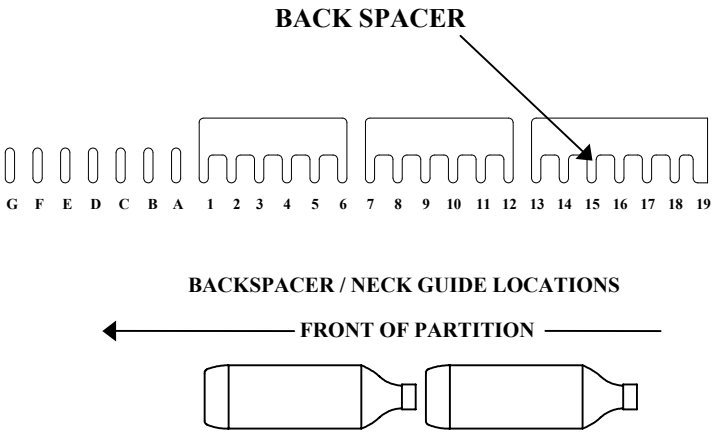

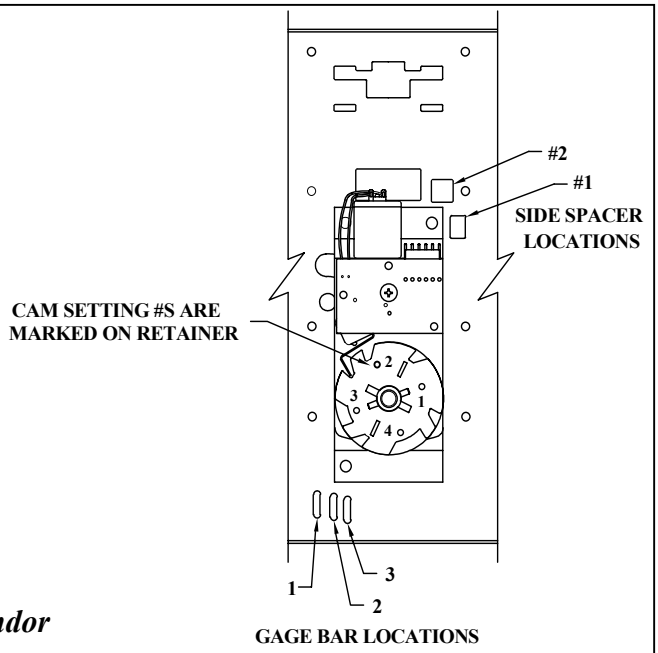

Note: Placement of bottle caps is to the back of the vendor

FOR OTHER PRODUCT SET-UP GUIDES, CONTACT THE VENDO COMPANY.
TEL: (559) 439-1770 FAX: (559) 650-3455.