Vendo Engineering 540/720 V MAX *Set Up Guide*

Size: 6.8oz / 200ML **Rev. A** **Date 02/15/02**

Pkg. Description/Type: COCIO CHOCOLATE MILK 6.8oz / 200ml GLASS

Franchise: UPP ENTERTAINMENT MRKT. **KIT#**

Column Setup

Cam Setting	Back Spacer	Magnetic Trim Piece Stiffener	Gage Bar Clip Location	Gage Bar Location	Magnetic Column Spacer (*)	Side Spacer	Sold Out Flap	Sold Out Spacer
2	5	ONE 1063813	C/#1 C/#2	#3	TWO 1121822-2	1078872 Loc. #2	Long	N/A

Note: To properly vend product the V-Max must have the columns set up as illustrated.

***Install magnetic column spacers into right side of partition above product side spacer (See Figure 1 for installation detail)**

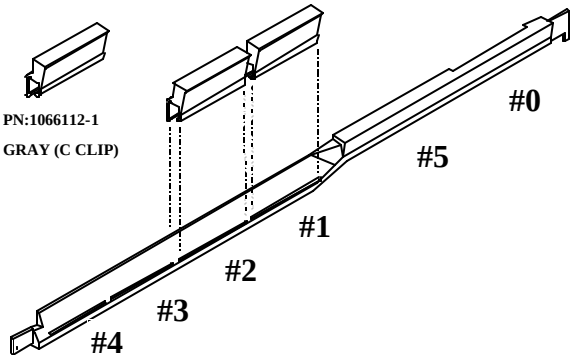

Gage Bar Clip Location

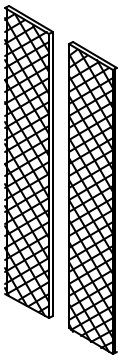

PN:1121822-2

Column Spacers

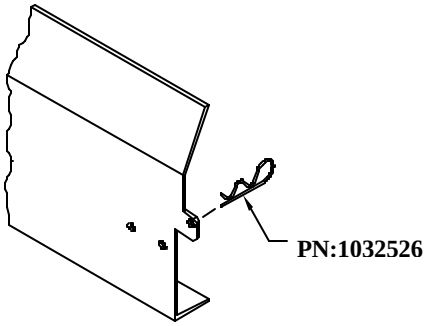

PN:1078872

Spacer

Set Up Guide

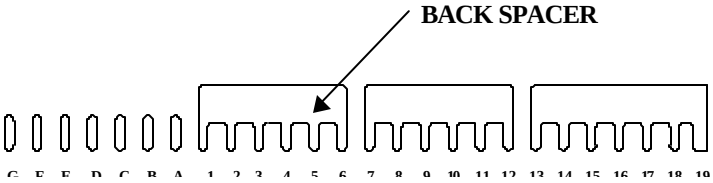

BACKSPACER / NECK GUIDE LOCATIONS

FRONT OF PARTITION

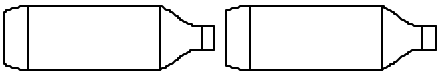

Note: Placement of bottle caps is to the back of the vendor

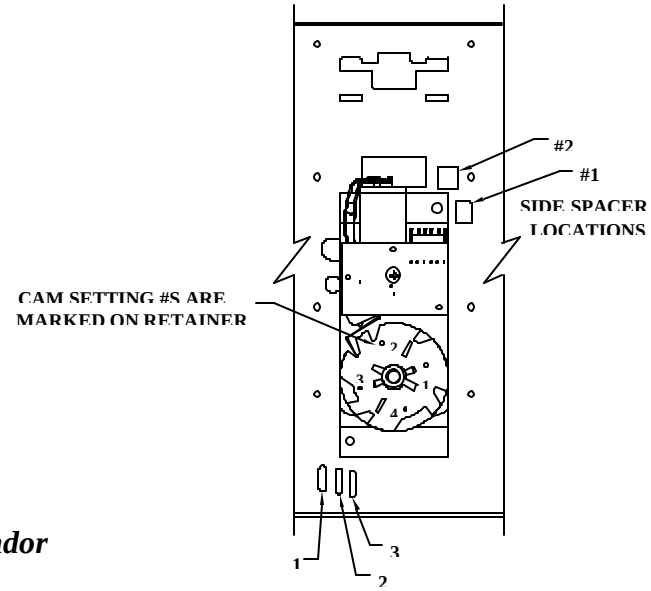

FOR OTHER PRODUCT SET-UP GUIDES, CONTACT THE VENDO COMPANY.
TEL: (559) 439-1770 FAX: (559) 650-3455.

Installation Instruction #

<u>Caution:</u> Disconnect power cord from power source before beginning installation

<u>Installation (see Figure 1)</u>

Step #1 Locate Back Spacer into position #5.

Step #2 Install .47 product side spacer (P/N1078872).

Step #3 Install two of the 38” long magnetic foam pads (P/N1121822-2) on the right side partition. Locate pads as shown in Figure 1 above the .47 product side spacer (P/N1078872).

Step #1 Place the trim piece #1063813 onto the top edge of the lower left hand side “Hat” style stiffener.

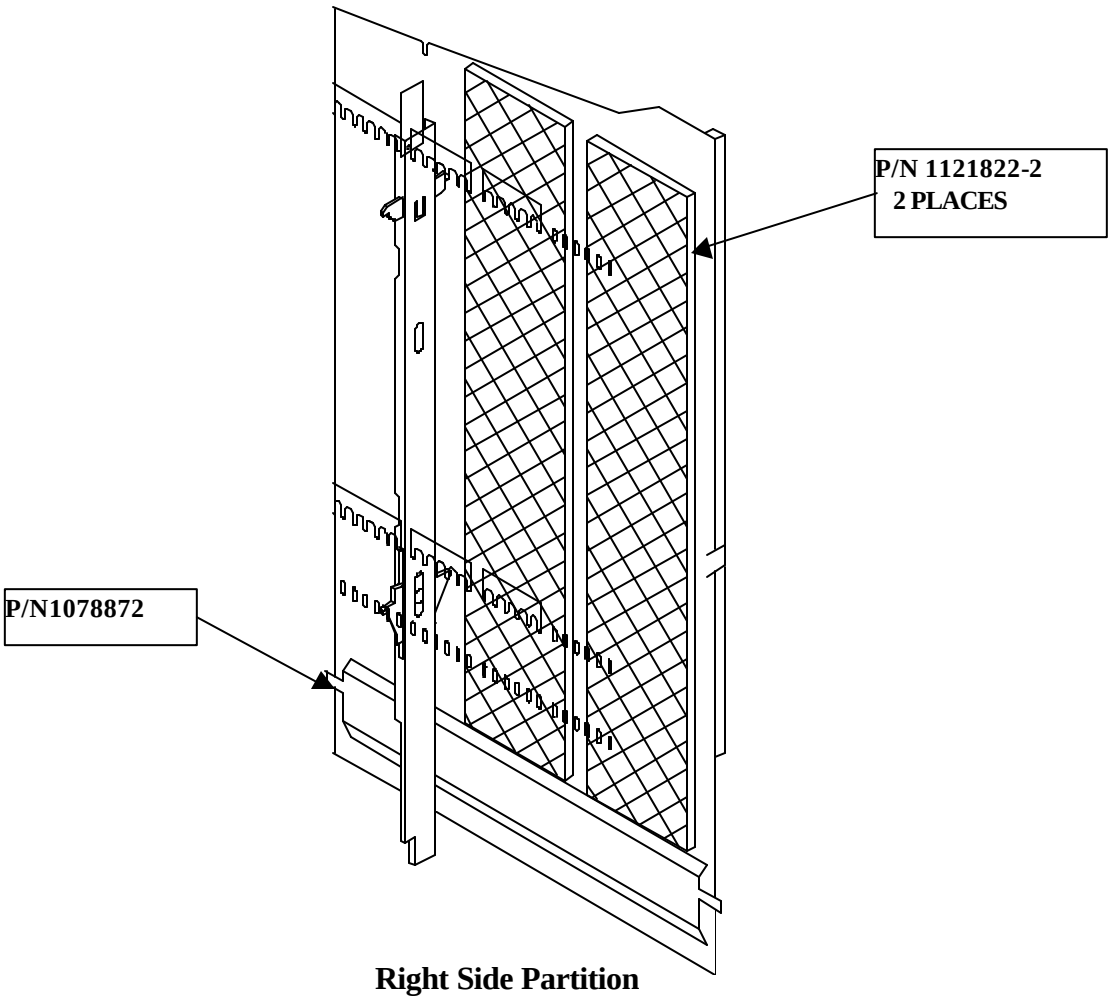

Right Side Partition

Figure 1