Vendo® Engineering *V-Max* *Set Up Guide*

Size: 16oz/473ml **Rev. A** **Date 3/31/03**
Pkg. Description/Type: Rock Star Energy Drink - Cans
Franchise: 7 UP

Column Setup

Cam Setting	Back Spacer	Neck Guide Locations	Gage Bar Clip Location	Gage Bar Location	Side Spacer	Sold Out Flap	Sold Out Spacer
2	7	N/A	C/1	#2	1122032 Loc. #1	1112163	N/A

Note: To properly vend product the V-Max must have the columns set up as illustrated.

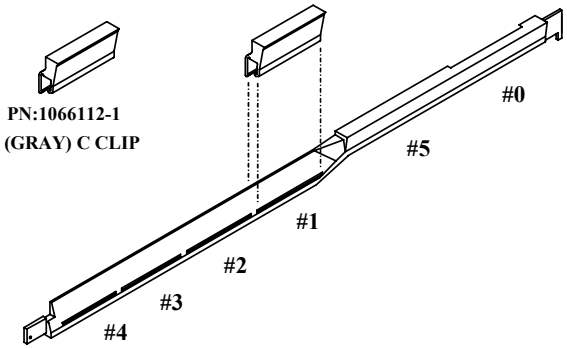

Gage Bar Clip Location

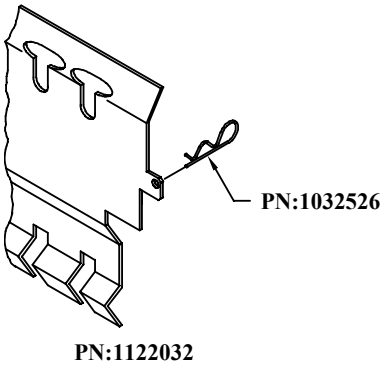

Spacer

Set Up Guide

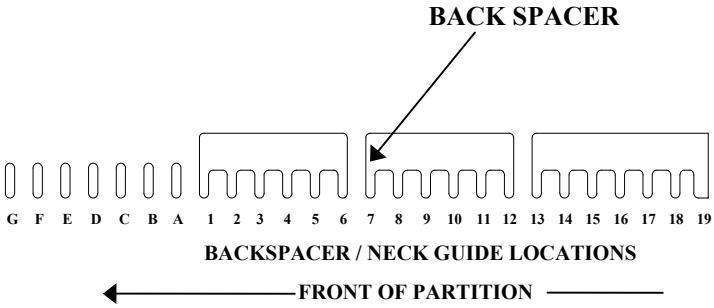

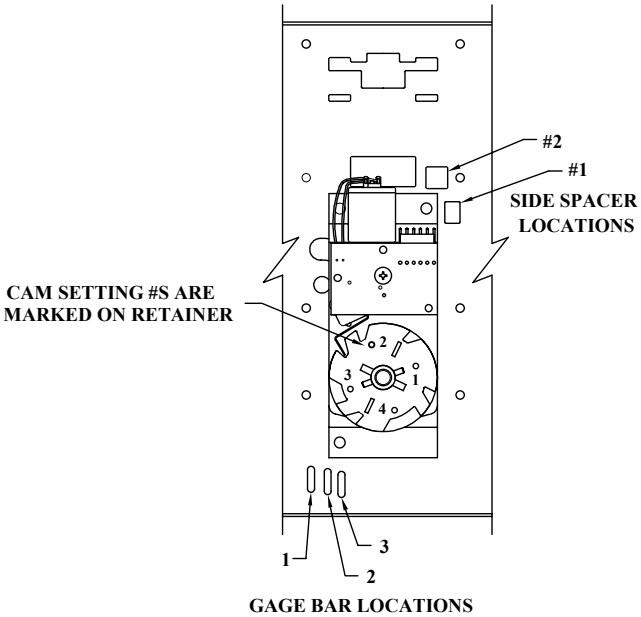

FOR OTHER PRODUCT SET-UP GUIDES, CONTACT THE VENDO COMPANY.
TEL: (559) 439-1770 FAX: (559) 650-3455.