Vendo® Engineering *V-Max* *Set Up Guide*

Size: 500ml / 16.9oz **Rev. D** **Date 11/29/01**

Pkg. Description/Type: CALISTOGA, ARROWHEAD, ZEPHYRHILLS, POLAND SPRING, DEER PARK, OZARK A

Franchise: PERRIER GROUP OF AMERICA **KIT#**

Column Setup

Cam Setting	Back Spacer	Neck Guide Locations	Gage Bar Clip Location	Gage Bar Location	Side Spacer	Sold Out Flap	Sold Out Spacer
2	14	N/A	C/1	#2	1078872 Loc. #2	Long	N/A

Note: To properly vend product the V-Max must have the columns set up as illustrated.

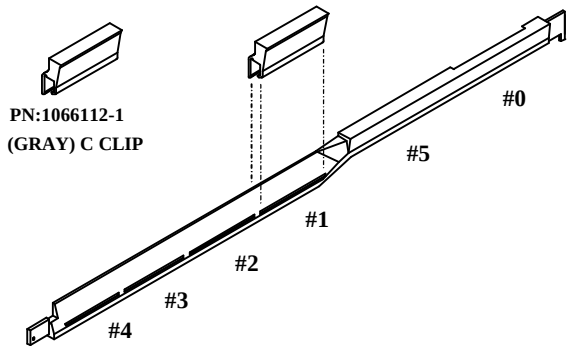

Gage Bar Clip Location

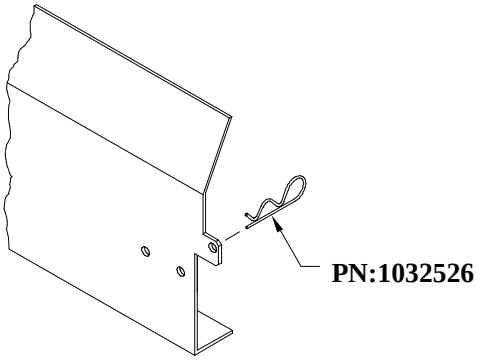

PN:1078872

Spacer

Set Up Guide

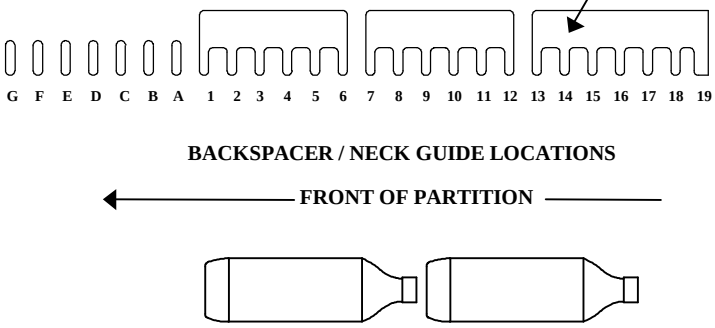

Note: Placement of bottle caps is to the back of the vendor

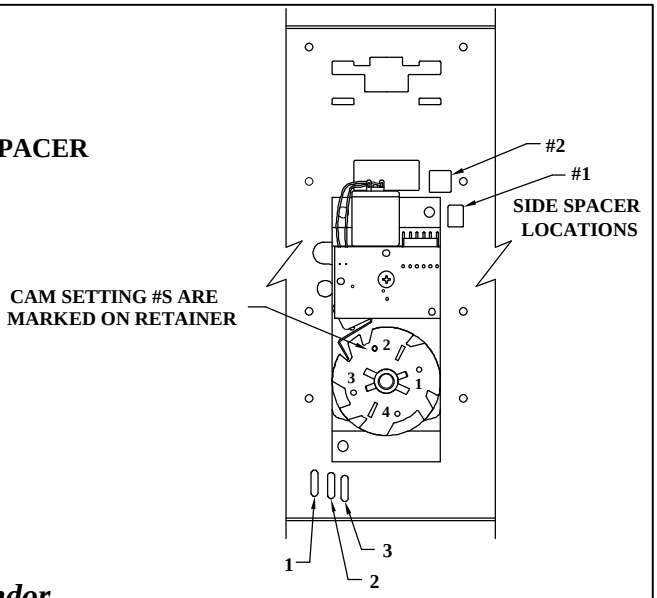

FOR OTHER PRODUCT SET-UP GUIDES, CONTACT THE VENDO COMPANY.
TEL: (559) 439-1770 FAX: (559) 650-3455.

Installation Instruction #