Vendo® Engineering *V-Max* *Set Up Guide*

Size: 20oz **Rev. A** **Date 3/21/03**
Pkg. Description/Type: Fruit $_2$O
Franchise: Very Fine

Column Setup

Cam Setting	Back Spacer	Neck Guide Locations	Gage Bar Clip Location	Gage Bar Location	Side Spacer	Sold Out Flap	Sold Out Spacer
2	14	N/A	C/#1	#1 Front #2 Back	2-1078848	1112163	N/A

Note: To properly vend product, the V-Max must have the columns set up as illustrated.

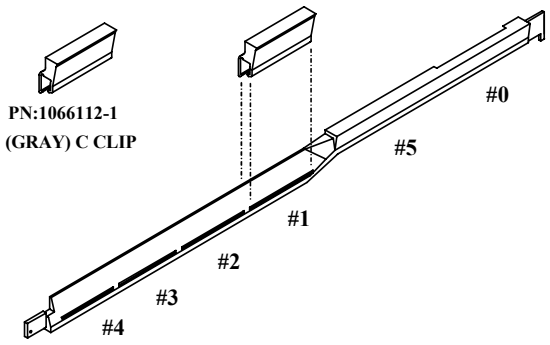

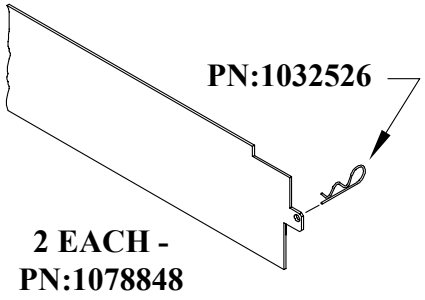

Gage Bar Clip Location **Spacer**

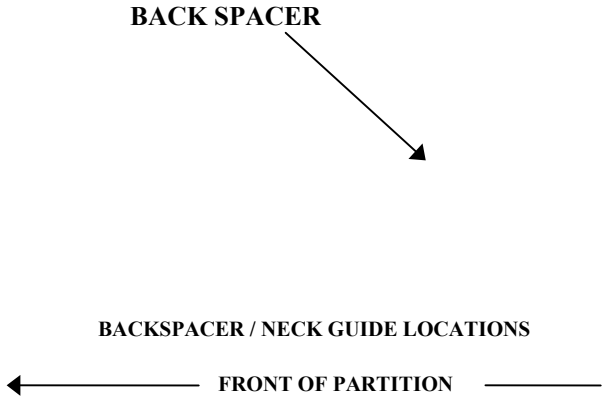

Note: Placement of bottle caps is to the back of the vendor

FOR OTHER PRODUCT SET-UP GUIDES, CONTACT THE VENDO COMPANY.
TEL: (559) 439-1770 FAX: (559) 650-3455.