Vendo® Engineering *V-Max* *Set Up Guide*

Size: 12oz / 355ml **Rev. B Date 05/11/01**
Pkg. Description/Type: GENERIC 12oz / 355ml CANS
Franchise: ANY **KIT# 1113228-9**

Column Setup

Cam Setting	Back Spacer	Neck Guide Locations	Gage Bar Clip Location	Gage Bar Location	Side Spacer	Sold Out Flap	Sold Out Spacer
4	19	N/A	B/#1 & B/#2 D/#0, E/#5	#1	1122032 Loc. #1	Long	N/A
3	11	N/A	B/#1 B/#2	#2	1122032 Loc. #1	Long	N/A

Note: To properly vend product the V-Max must have the columns set up as illustrated.

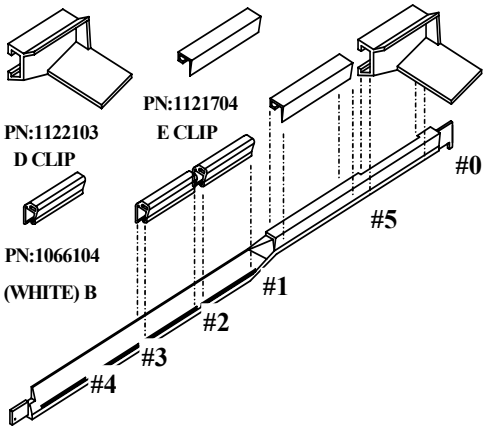

Gage Bar Clip Location

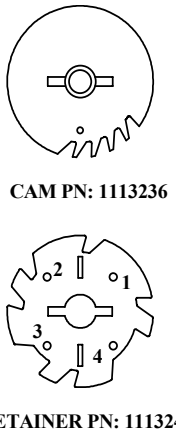

Cam and Retainer

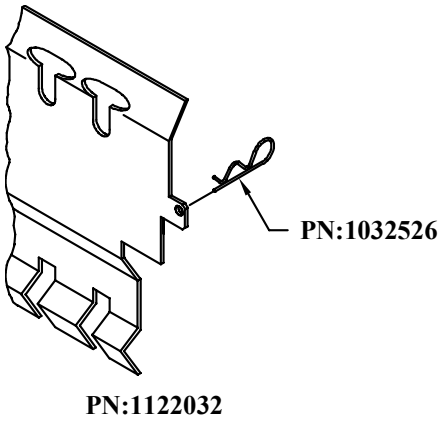

Spacer

Set Up Guide

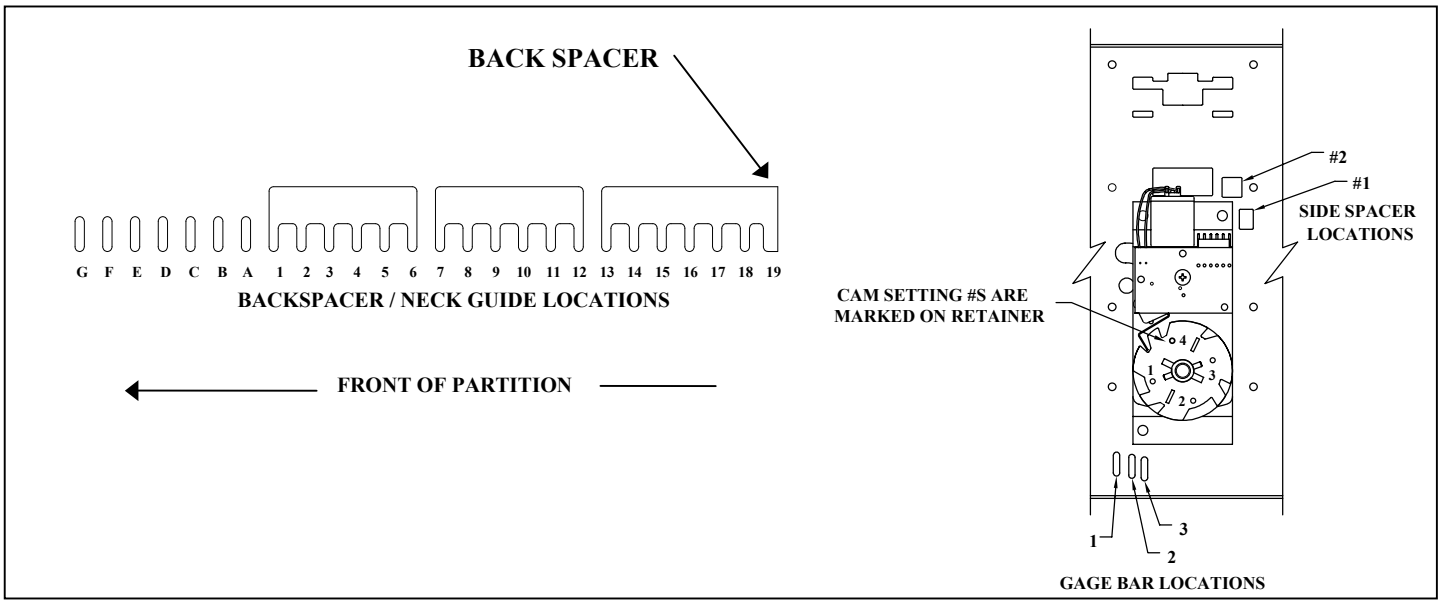

FOR OTHER PRODUCT SET-UP GUIDES, CONTACT THE VENDO COMPANY.
TEL : (559) 439-1770 FAX: (559) 650-3455.

Installation Instruction #1122171