Vendo® Engineering V-Max *Set Up Guide*

Size: 16oz / 473ml **Rev. B** **Date 02/28/01**
Pkg. Description/Type: WELCH'S JUICE - PET
Franchise: WELCH'S **Kit#**

Column Setup

Cam Setting	Back Spacer	Neck Guide Locations	Gage Bar Clip Location	Gage Bar Location	Side Spacer	Sold Out Flap	Sold Out Spacer
2	12	N/A	C/1	#2	1122032 Loc. #1	1112163	N/A

Note: To properly vend product the V-Max must have the columns set up as illustrated.

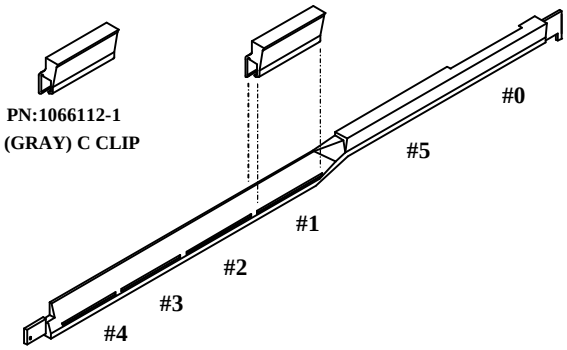

Gage Bar Clip Location

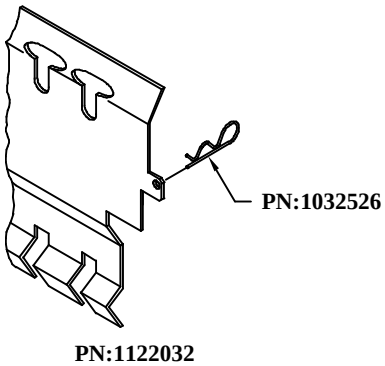

Spacer

Set Up Guide

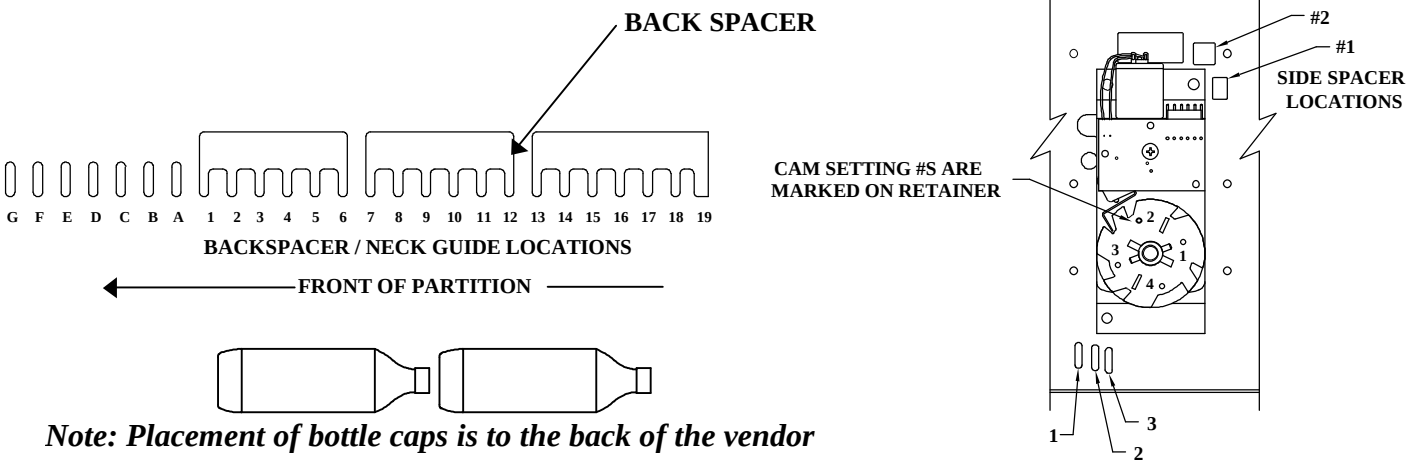

Note: Placement of bottle caps is to the back of the vendor

FOR OTHER PRODUCT SET-UP GUIDES, CONTACT THE VENDO COMPANY.
TEL: (559) 439-1770 FAX: (559) 650-3455.

Installation Instruction #