Vendo® Engineering V-Max *Set Up Guide*

Size: 16.9oz / 500ml **Rev. B** **Date 12/30/98**
Pkg. Description/Type: MEMBER'S MARK
Franchise: BEVERAGE CANNERS, INT'L

Column Setup

Cam Setting	Back Spacer	Neck Guide Locations	Gage Bar Clip Location	Gage Bar Location	Side Spacer	Sold Out Flap	Sold Out Spacer
2	14	N/A	C/1	#2	1115791 Loc. #1	Long	N/A

Note: To properly vend product the V-Max must have the columns set up as illustrated.

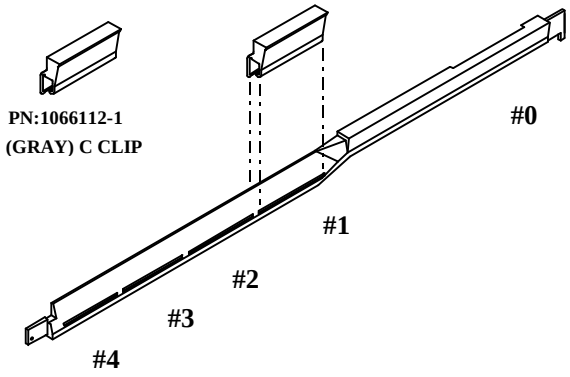

Gage Bar Clip Location

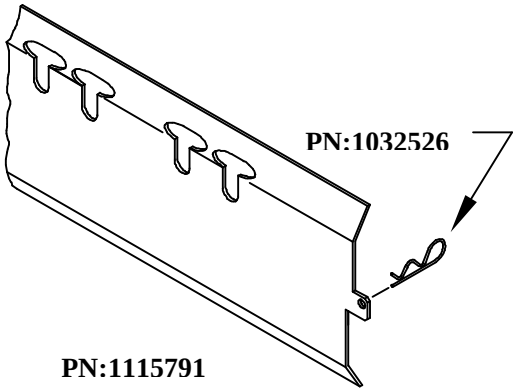

Spacer

Set Up Guide

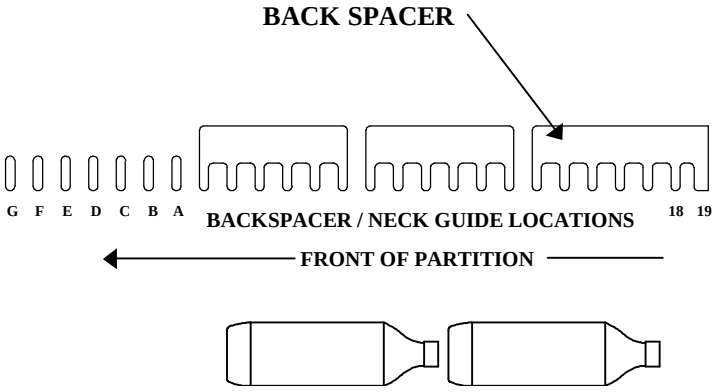

Note: Placement of bottle caps is to the back of the vendor

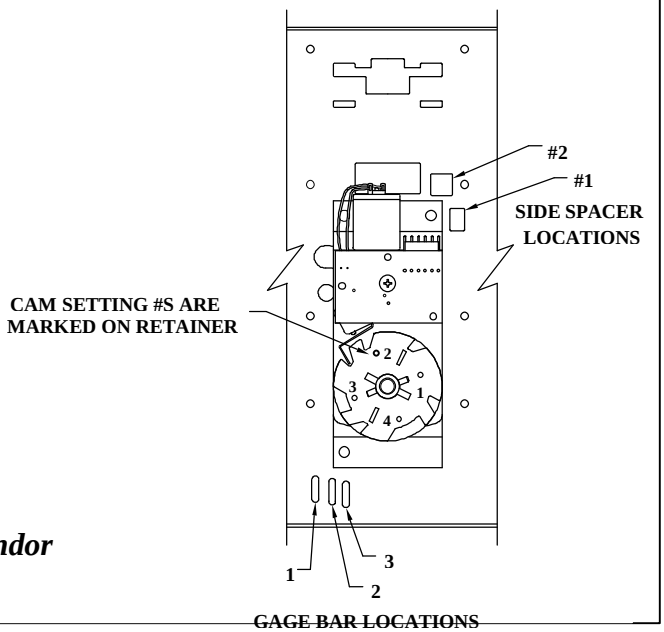

FOR OTHER PRODUCT SET-UP GUIDES, CONTACT THE VENDO COMPANY.

Installation Instruction #1120087

TEL: (559)439-1770 FAX: (559) 439-2083.